WARNING

Proper operation of your brakes is essential for your safety and the safety of others. Any brake service should be performed ONLY by persons experienced in the installation and proper operation of brake systems. It is the responsibility of the person installing any brake component or kit to determine the suitability of the component or kit for the particular application. After installation and before operating your vehicle, be sure to test the function of the brakes under controlled conditions.

DO NOT DRIVE WITH UNTESTED BRAKES!

FOR TECHNICAL ASSISTANCE CALL:

888-533-1199

MONDAY - FRIDAY
8:00 AM TO 5:00 PM EST

IMPORTANT

Take time to read all the literature that came with this kit. Check the provided list of parts against what you received to ensure all parts are present. While this kit was designed to make the process of changing brake parts as simple as possible. NOTE: WITH SOME KITS IT MAY BE NECESSARY TO MAKE MINOR CHANGES TO YOUR CAR!

READ ALL WARRANTY DISCLAIMERS AND RETURN POLICIES INCLUDED IN THIS KIT PRIOR TO INSTALLATION!

MASTER POWER BRAKES

110 CROSSLAKE PARK RD. MOORESVILLE, N.C. 28117

www.mpbrakes.com

DB1304 SERIES

1970-1974 E BODY
PLYMOUTH DODGE

IT S MORE THAN BRAKES...IT S CONFIDENCE!

INSTALLATION INSTRUCTIONS

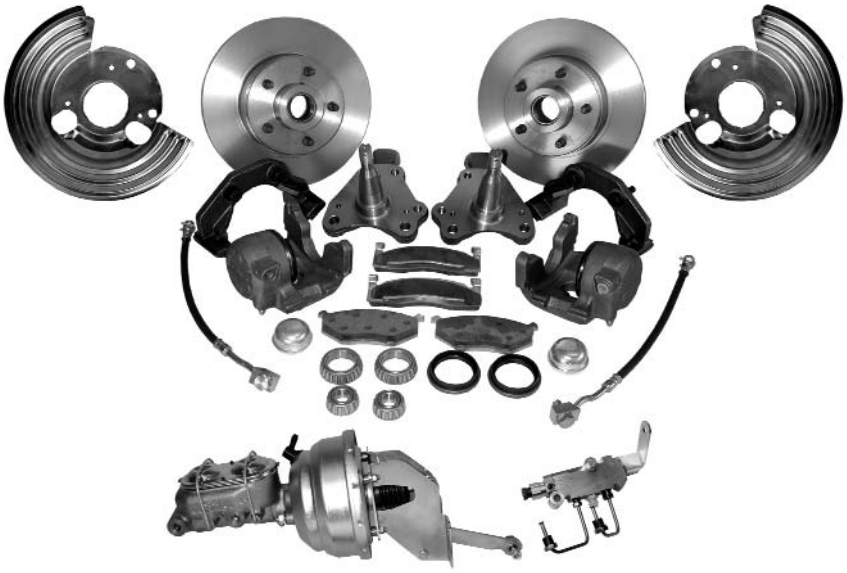

MASTER POWER BRAKES

110 CROSSLAKE PARK RD MOORESVILLE N.C. 28117

www.mpbrakes.com 704-664-8866

REVISED 4/22/02

DB1304P / DB1304PHP
DISC, E-BODY ONLY, 70-74 CHALLENGER/ CUDA
DRILLED / SLOTTED
PARTS LIST

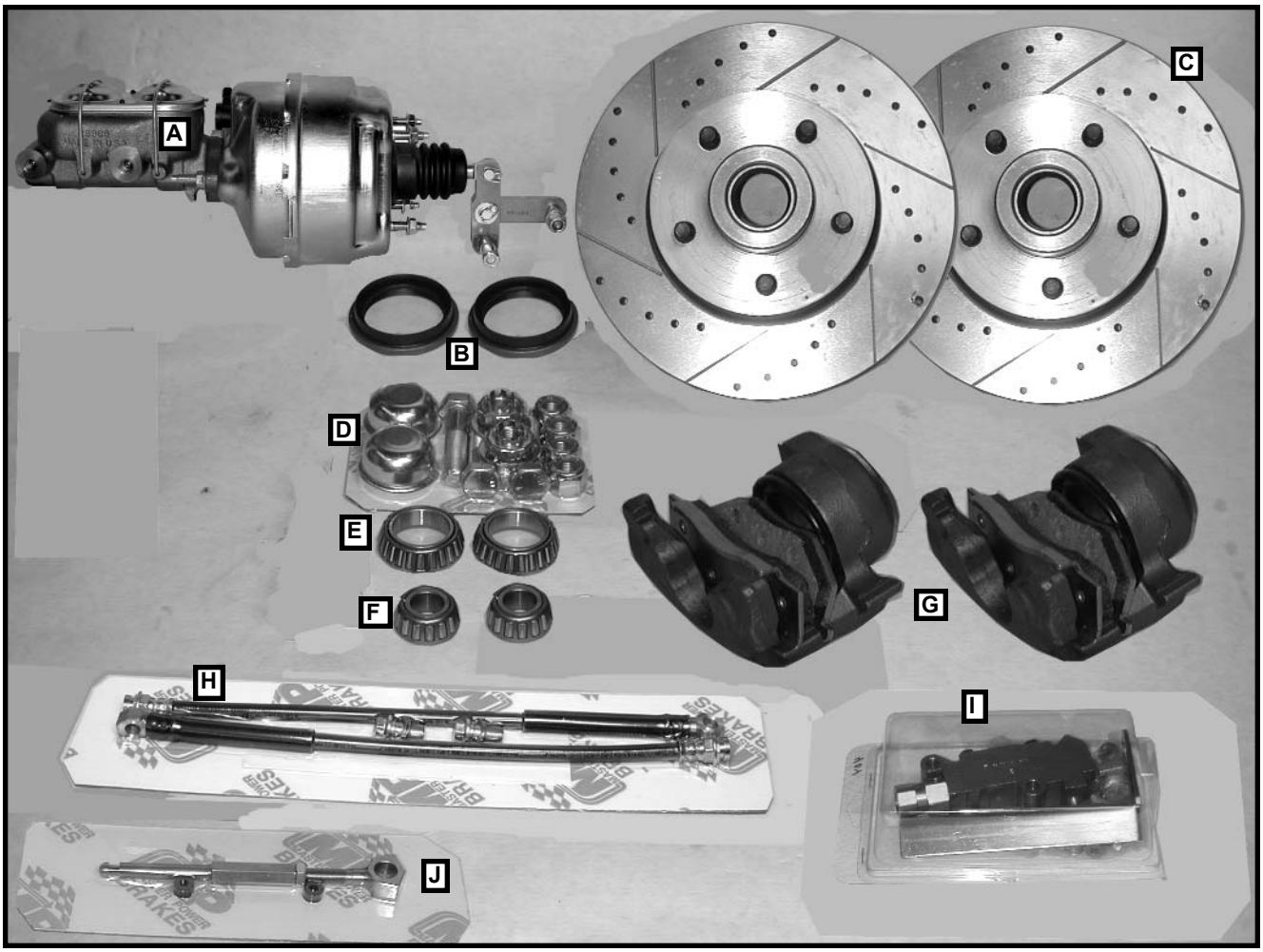

PARTS LIST

A) (1) BM1304 BOOSTER, M/C 70-74 CUDA, CHALLENGER (SEE BM1304 PARTS LIST)
B) (2) HW5121 SEAL, ROTOR
C) (2) RT141145HP ROTORS, SLOTTED B-BODY LEFT/ RIGHT ROTATION**** SOLD IN PAIRS ******
D) (1) HW1302HK HARDWARE KIT
(2) 12R200PCOZ COTTER PIN, 1/8 X 2”
(4) 62F275HCS8Y HCS, 5/8-18 X 2.75, GR-8, ZINC
(4) 62FNNEZ NUT, 5/8-18, NYLOCK, ZINC
(2) HW615005 WASHER, SPINDLE ORG. GM
(2) 615072 NUT, SPINDLE
(2) 615073 NUT, SLOTTED
(2) HW4000 DUST CAP, MOPAR
E) (2) HWA17 BEARING, INNER
F) (2) HWA2 BEARING, OUTER
G) (2) CA410304 CALIPER, 76-79 ASPEN, VOL. 73-79
H) (1) HS88520K HOSE KIT, FRONT, 69-77, 16 GM, SINGLE PISTON CALIPER SET
(2) HS88520 HOSE, F, 69-71 CAMARO
(2) HW21082 BOLT, HOSE 7/16 X 20 SHORT
(4) HW4390 COPPER SEALING WASHER USED W/ 4039 & 4040 CALIPER

CONTINUED ON PAGE 2

DB1304P
CONTINUED

I) (1) VL3360K VALVE KIT, W/ FITTINGS
(1) 25C175HCS5Z 1/4 X .175 BOLT
(1) 25CNNEZ 1/4 COURSE NYLOCK NUT
(1) BR1261N BRACKET, VALVE, UNIVERSAL
(2) HW105-3 NUT, 3/16 TUBE 3/8-24 THD
(1) HW106-3 PLUG, 3/16”
(2) HW106-4 PLUG, INVERTED STEEL 1/4” O.D.
(1) HW115-37 NUT, 3/16 TUBE 7/16-24 THD RED
(1) HW115-38 NUT, 3/16 TUBE 1/2-20 THD BLACK
(1) HW115-39 NUT, 3/16 TUBE 9/16-18 THD OLIVE
(1) HW1709 PLUG, SWITCH, COMBO VALVE
(1) HW210-43 ADAPTOR, BRASS 7/16-3/8M
(2) HW300-3 COUPLER 3/16
(2) HW300-4 COUPLER 1/4
(2) HW300-5 COUPLER 1/2
(1) HW3359 PLUG, COMBO VALVE, 4 WHEEL DISC
(1) HW702-3 T-FITTING 3/16 X 3/16 X 3/16
(1) VL3350 VALVE, COMBO, DISC / DRUM
J) (1) PR4722K PUSH ROD, MANUAL MOPAR
(1) 37FNFJOZ NUT, 3/8-24 HEX FINISH J-NUT ZINC
(1) HW4723 GROMMET, RUBBER FOR CHRYSLER PUSH ROD
(1) PR4722 PUSH ROD, MANUAL MOPAR
K) (2) SP2627L/R SPINDLES, MOPAR B-BODY, A-BODY MUST USE A-ARMS.
ONLY 4-1/2 BOLT CIRCLE ← → (NOT SHOWN)
L) (2) AC1302D/P DUST SHEILD, MOPAR PAIR ← → (NOT SHOWN)

MASTER POWER BRAKES 888-533-1199

INSTALLATION INSTRUCTIONS

INCLUDED COMPONENTS

Your power brake conversion kit will contain the following components:

1.8” power booster with firewall brackets, firewall boot and boot plate.
2. Master cylinder
3. Combination valve kit with bracket and lines
4. Disc brake spindles
5. Caliper brackets with spindle mounting bolts (4 1-1/2”)
6. Calipers with pads and hardware
7. Rotors
8. Bearings, seals and dust caps
9. Caliper hoses
10. Vacuum hose and intake manifold fitting (not shown)
11. Driver and passenger side splash guards.

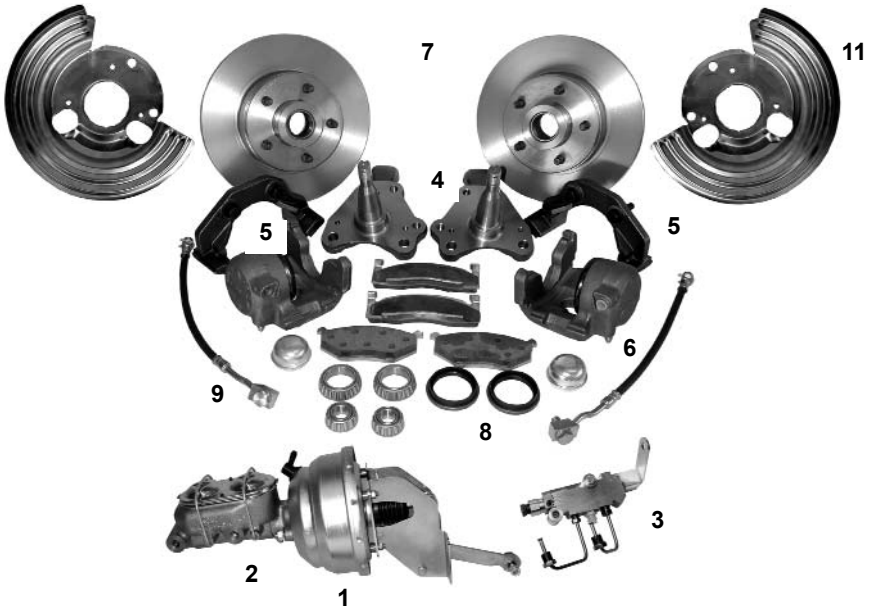

INSTALLATION

Installation of the disc brake kit will require the use of the following tools:

3/8” ratchet drive set	Mallet	Flare wrench set
Box end wrench set	Ball joint fork	Drum brake tool
Pliers	Screwdriver	Snips
Line flaring tool	Line bending tool	

Always refer to the vehicle owners manual for the correct torque specifications when installing this kit

1. If you are performing the installation with a jack, be sure that the parking brake is set and that the rear wheels are chocked. Support the front of the vehicle with jack stands. Never work on sloping ground.

2. If you are using a lift, raise the vehicle to a comfortable working height.

3. Remove the front wheels.THIS KIT REQUIRES 15” WHEELS FOR DISC BRAKES.

4. At this point, be sure to place the proper support under the lower control arm. Failure to do so will allow the coil spring to blow out when the spindle is removed which could result in serious injury and damage to the vehicle.

5. Utilizing a mallet and screwdriver, remove the brake hose clip at the frame bracket by tapping it loose. Disconnect the brake hose from the hard line using the appropriate flare wrenches.

6. Locate the ball joint at the tie rod end and the steering arm. Remove the cotter pin and loosen the ball joint nut approximately 1/2 off. This allows for a controlled , separation of the tie rod end and the steering arm. Place the ball joint fork between the steering arm and the ball joint. Strike the fork with a mallet until the steering are and ball joint separate. Remove the ball joint nut.

7. Repeat the process described in step 6 for the lower and upper ball joint at the spindle. Place the ball joint fork between the spindle and the ball joint.

8. Slowly lower the support and remove the drum brake assembly as a unit.

9. Inspect the ball joints for signs of excessive wear and check to see if the rubber boot is torn. If the ball joint wob bles excessively or is worn, now is the time for replacement. Clean the ball joints with a rag.

10. Take the drum brake assembly to a bench to disassemble it. Remove the dust cover by twisting a screwdriver between the dust cover and the hub. Remove the cotter pin and take off the spindle nut. Save the spindle nut and-the keyed washer to use on the disc spindle. Remove the bolts that hold the steering are to the spindle and retain the arm and the bolts to use on the disc spindle. (This requires removing the brake shoes which is easier with a drum brake tool.)

THIS KIT REQUIRES THAT YOU RE USE THE OLD STEERING ARMS AND BALL JOINTS. INSPECT AND REPLACE BALL JOINTS IF NECESSARY.

11. Bolt the old steering arm/ball joint assembly to the new disc brake spindle as shown below.

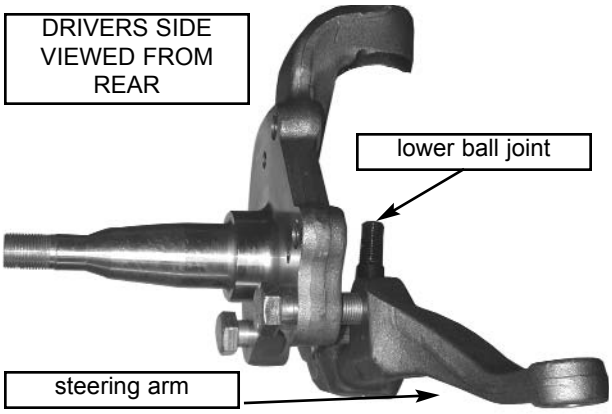

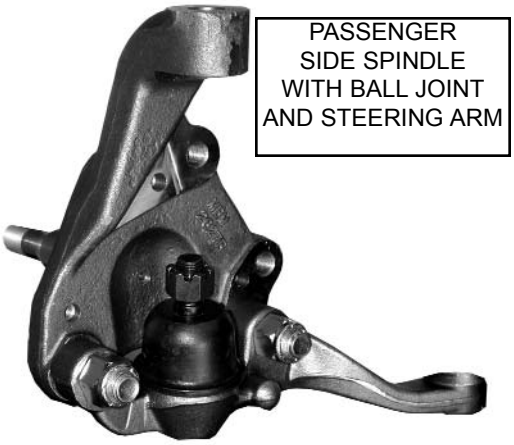

12. Now assemble the caliper bracket to the spindle with the 1 1/2” bolts supplied with the spindles. Then install the splash guards to the splindle.

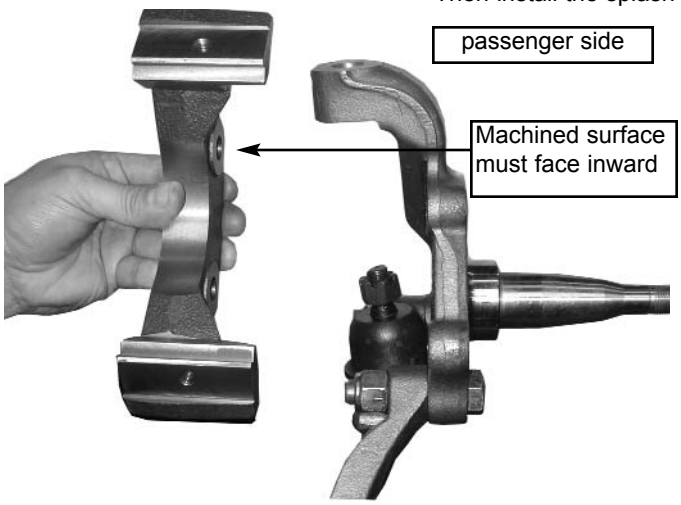

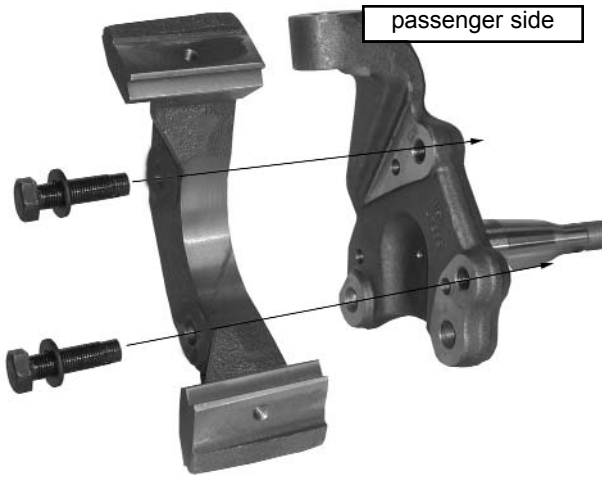

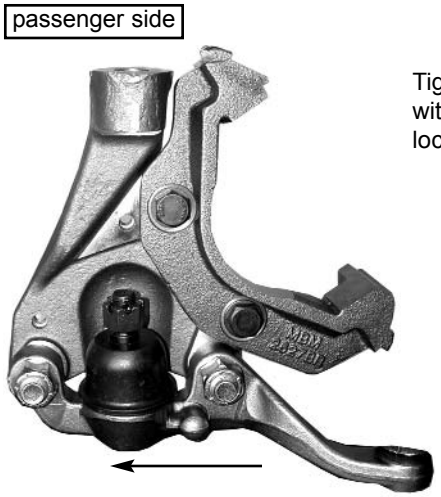

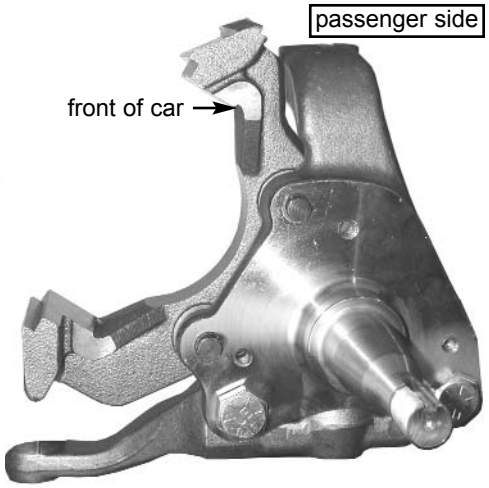

Install the splash guard to the spindle.
NOTE: SPLASH GUARD IS NOT SHOWN IN OTHER PICTURES, BUT IT DOES REMAIN ON SPINDLE.

BE SURE TO GREASE THE BEARINGS BEFORE INSTALLING WITH BEARING GREASE ONLY

13. Now install the inner bearing (the larger bearing) and bearing seal into the rotor as shown above. Carefully tap the bearing seal into place securely with a small hammer or a large socket.

14. Install the rotor onto the spindle followed by the outer bearing, the spindle washer, and the spindle nut. Tighten the spindle nut until the rotor does not spin freely and then back off the nut slightly until the rotor spins freely but does not wobble. Secure the spindle nut with the cage followed by the cotter pin. Be sure to bend over the tabs of the cotter pin to lock everything in place.

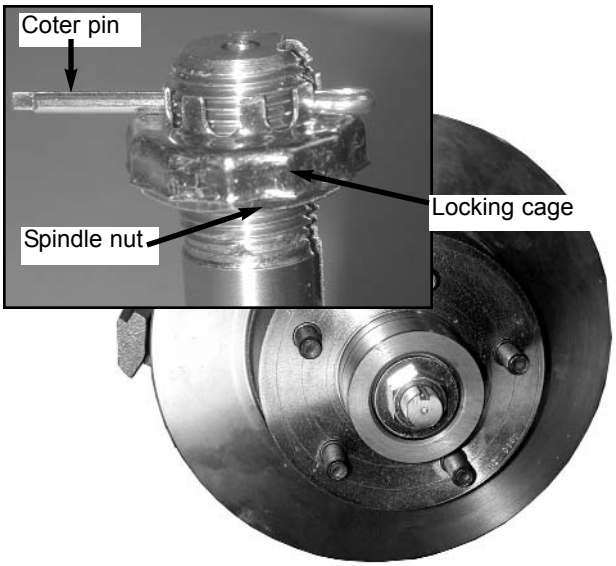

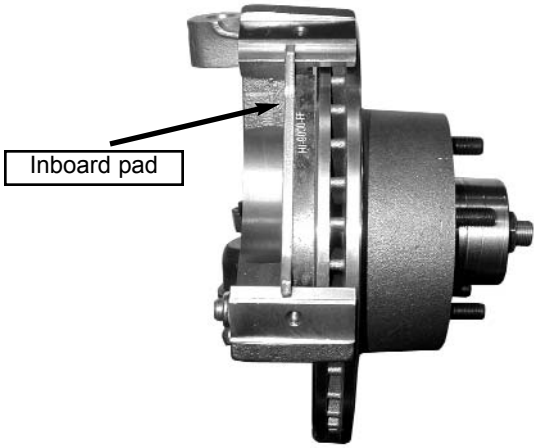

15. After the spindle is on the rotor place the inboard disc pad into the caliper cradle. Now drop the caliper into the cradle with the outboard pad on the other side of the rotor so the pads sandwich the rotor between them.

BLEEDER SCREW MUST FACE UP

PASSENGER SIDE WITH CALIPER TOWARD REAR OF CAR. INSIDE VIEW.

PASSENGER SIDE WITH CALIPER TOWARD REAR OF CAR. OUTSIDE VIEW.

16. Secure the caliper to the bracket with the supplied clips as shown. The larger clip goes on first followed by the smaller clip.

THE BLEEDER SCREW MUST FACE UP

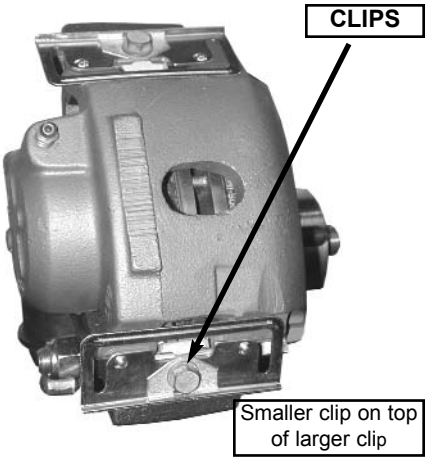

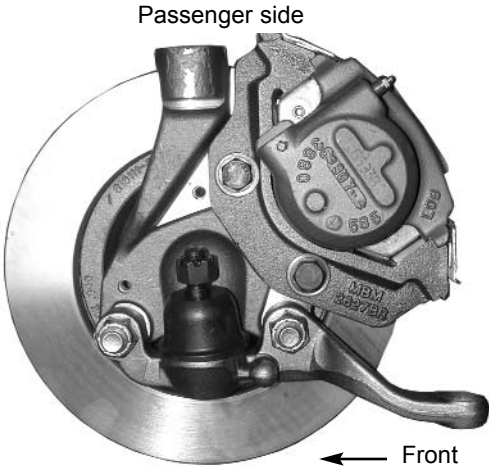

INSTALLING THE ASSEMBLED SPINDLES ON THE CAR

17. The assembled spindles will be bolted to the vehicle in reverse of the removal of the drum spindles. Attach the pre assembled disc kit onto the lower control arm bolt. Snug the nut. (check the servide manual for the specified torque value) Add the cotter pin.

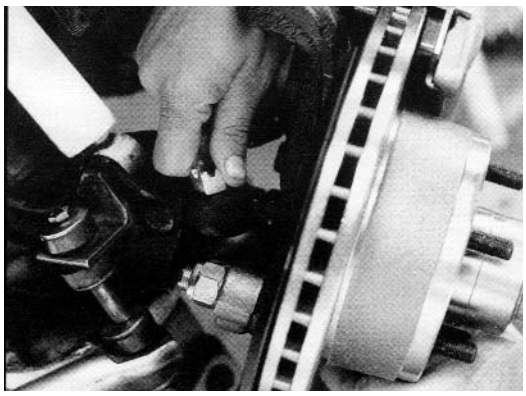

18. Pop on the new upper-ball-joint boot-or the old one if you didn't destroy it and raise the control arm until the ten sion is removed from the shock so you can get the upper and lower ball joints in without stress. Again, remem ber the torque specs and your cotter pins. Connect the tie rod and the new brake hoses that came with the kit. Run the hoses to the frame and connect to the hard line where the drum hoses were attached. **(If lines are too short you must extend your hard lines to a new location. Some cars are different, so it will require some modifications.)**

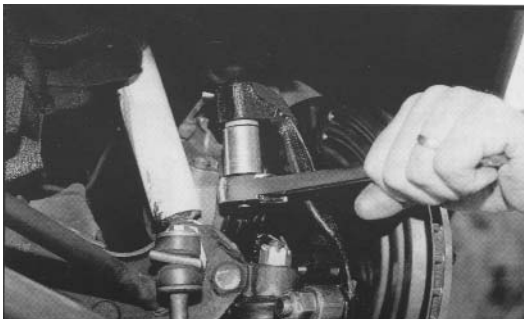

Remember this: You will need to get a wheel alignment.

MANUAL MASTER CYLINDER INSTALLATION

1. To remove the master cylinder you will first need to disconnect all the brake lines. (Disconnect the battery to ensure that you don't drain all the power by leaving the brake and interior lights on.) Remove the pushrod from the brake pedal by removing the bolt located at the top of the pedal (arrow A). There are four bolts that you need to remove in order to pull the master cylinder off. Two of them (arrows B and C) are easy to see and get to; the other two located on the opposite side of the firewall are a complete pain to get to. Get to them, undo them, and then curse at them.

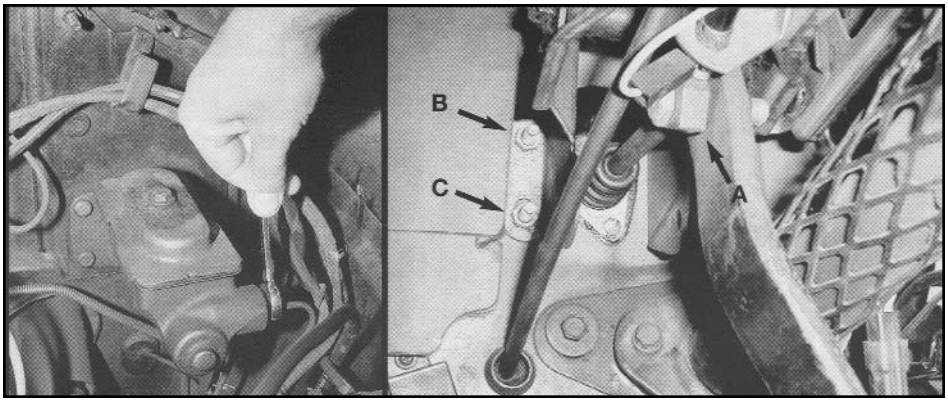

2. Remove the old push rod from the master for re use with the new master cylinder.
3. Bench bleed the new master cylinder to remove all the air.
4. Mount the new master in the same location as the old one.
5. Re attach the push rod to the pedal. See below for helpful information.
6. Install the combination valve kit and plumb the valve to the master as per the diagram with the valve kit.
7. Re plumb the lines that run to the front and rear of the vehicle. Follow the supplied valve plumbing diagram.
8. Bleed the entire braking system and test the brakes before driving. If you have a spongy pedal, re bleed the system and try again.

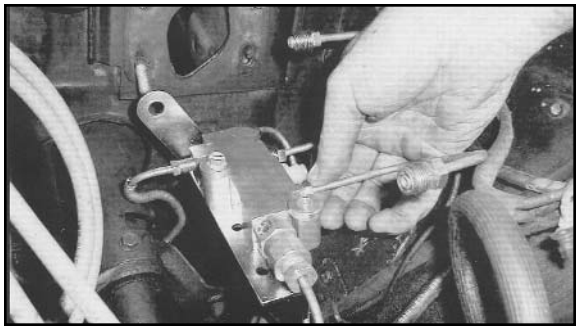
Typical valve installation

On cars which have single line master cylinders you must make a new hard line from the proportioning valve to the rear line and connect them. Make sure you use a double flare tool to make these lines. You must tie the two lines from left and right front brakes with a T fitting and run a line to the rear side of the proportioning valve to the T fitting. Before making these hard lines invest a few dollars in a good tubing bender. Take your time and do a nice neat job with these lines staying away from exhaust, steering or other things that could harm them. The protective coil that covers the lines is available from a Chrysler dealer. The part # is 3879283.

When adjusting the new pushrod, make sure that you leave about 1/4 inch of play on the brake pedal. Once it is properly adjusted, slip the locking retainer on the end of the pushrod and insert it into the master cylinder. You only get to do this once, so make sure your adjustments are final. Bolt the pushrod back onto your brake pedal. Bleed the brakes.

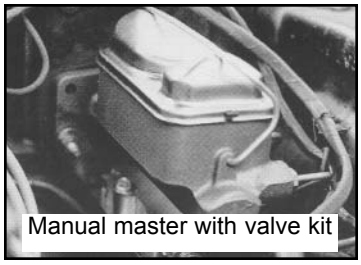
Manual master with valve kit

Special Notes: If your master cylinder is located close to the exhaust it is a very good idea to make a heat shield from a piece of aluminum. This will keep your master cylinder from heating up while you are profiling at the local drive in. If you are installing these disc brakes on a drum brake car that had no power brakes remember that it takes about 1200 lb. of pressure to stop with disc brakes where drums only take about 400. What this means is that you will have to apply more pressure to the pedal stop. After a few stops you will not even notice the difference. The big advantage is that the car will stop much better and straighter. Your car is now much safer to drive than before.

POWER BOOSTER INSTALLATION

1. To remove the master cylinder you will first need to disconnect all the brake lines. (Disconnect the battery to ensure that you don't drain all the power by leaving the brake and interior lights on.) Remove the pushrod from the brake pedal by removing the bolt located at the top of the pedal (arrow A). There are four bolts that you need to remove in order to pull the master cylinder off. Two of them (arrows B and C) are easy to see and get to; the other two located on the opposite side of the firewall are a complete pain to get to. Get to them, undo them, and then curse at them.

   If your car had **original power brakes** remove the old booster and the linkage(B) on the pedal support. Use the large boot plate(A) to cover the hole in the firewall and as a template to drill holes for the new booster attachment.

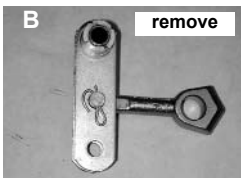

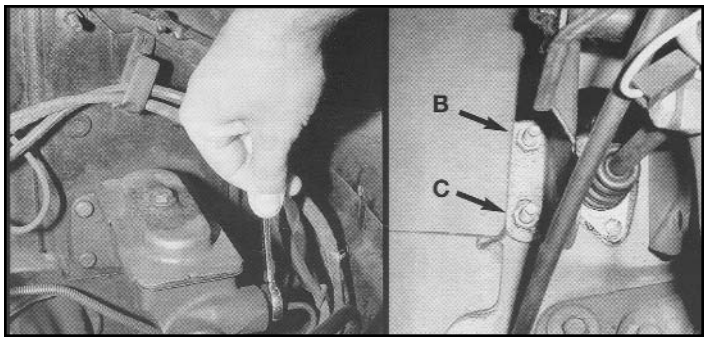

2. Bench bleed the new master cylinder to remove all the air. If all air is removed the master cylinder piston will be hard to push.
3. Mount the power booster onto the firewall using the four studs or holes from the removal of the master. For cars that were originally power brakes use the boot plate (A above) as a template to drill new holes.
4. Attach the pedal rod from the booster to the pedal locating it in the same position as the manual master.
5. Supply the vacuum from the back of the carburetor of the intake manifold. Use the supplied vacuum hose and intake manifold fitting. You will need at least 18” vacuum.
6. Mount the master cylinder onto the booster.

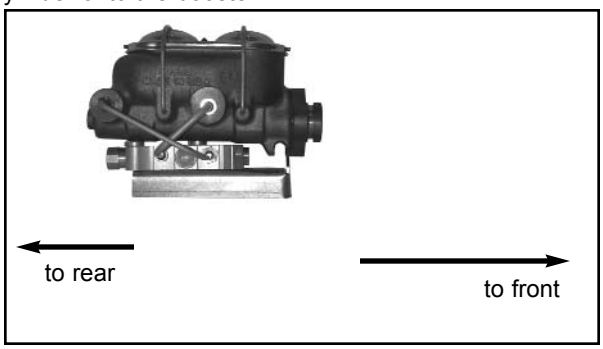

7. Install the combination valve as per the supplied valve kit instructions.
8. On cars which have single line master cylinders you must make a new hard line from the proportioning valve to the rear line and connect them. Make sure you use a double flare tool to make these lines. You must tie the two lines from left and right front brakes with a T fitting and run a line to the correct side of the proportioning valve to the T fitting. Before making these hard lines invest a few dollars in a good tubing bender. Take your time and do a nice neat job with these lines staying away from exhaust, steering or other things that could harm them. The pro tective coil that covers the lines is available from a Chrysler dealer. The part # is 3879283.
9. When the valve is plumbed up correctly bleed the entire system with vacuum not applied to the booster.
10. Start the engine and supply the booster with vacuum. Test the brakes. If the pedal goes to the floor or is very spongy re bleed the system.
11. Test drive the car in a safe location before driving.

Special Notes: If your master cylinder is located close to the exhaust it is a very good idea to make a heat shield from a piece of aluminum.

CALL MASTER POWER BRAKES
TECH LINE#
FOR HELP
888-533-1199

HS88520
INSTALLATION INSTRUCTIONS

INCORRECT

INCORRECT

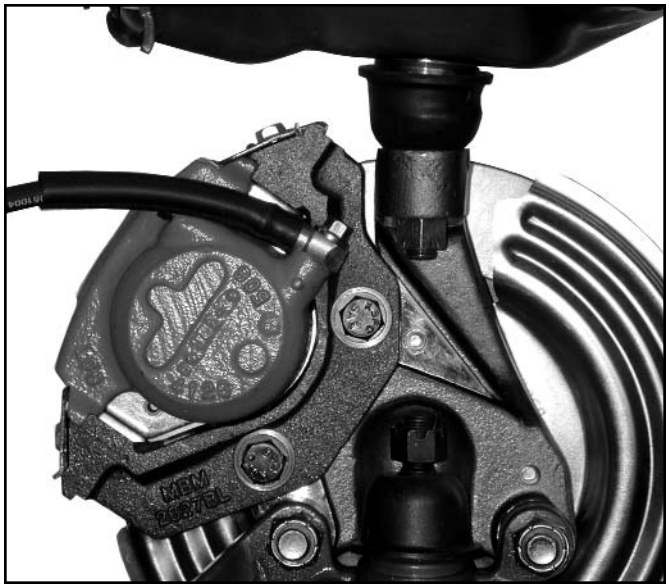

CORRECT

CORRECT

Revised 8/3/04