DROPPED SPINDLE DIMENSIONS

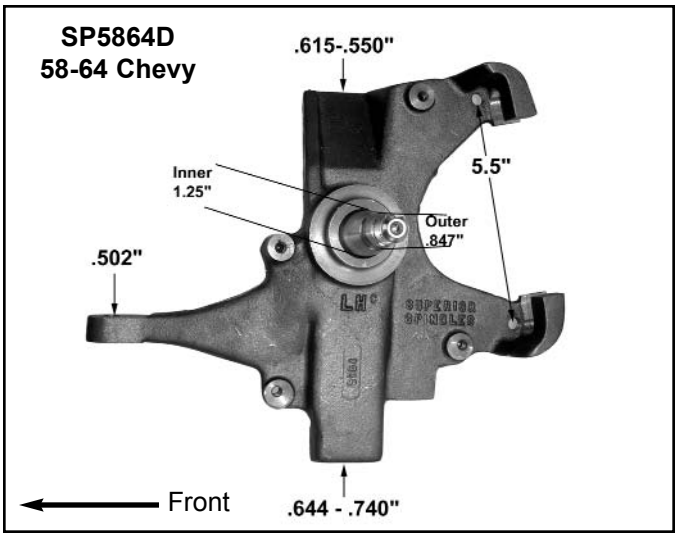

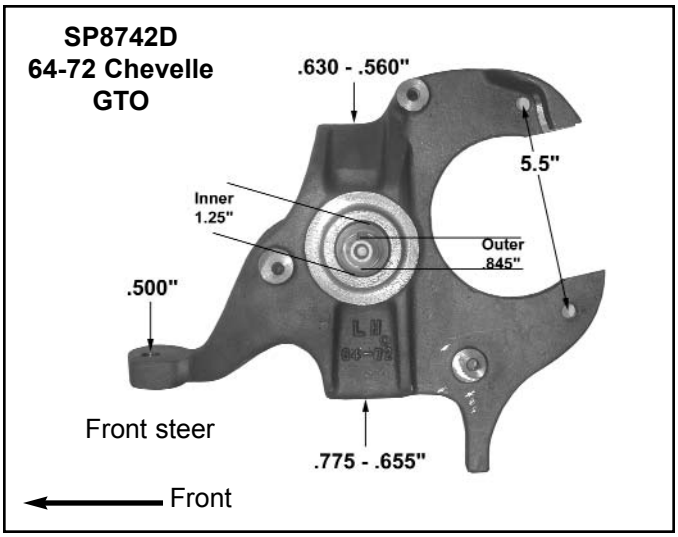

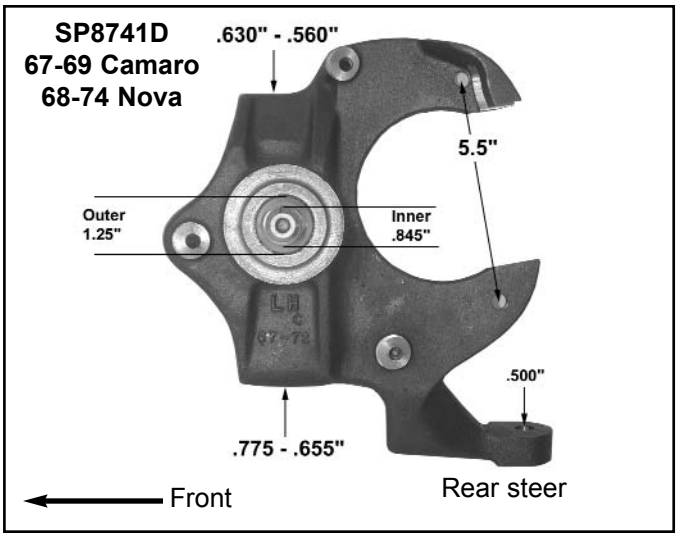

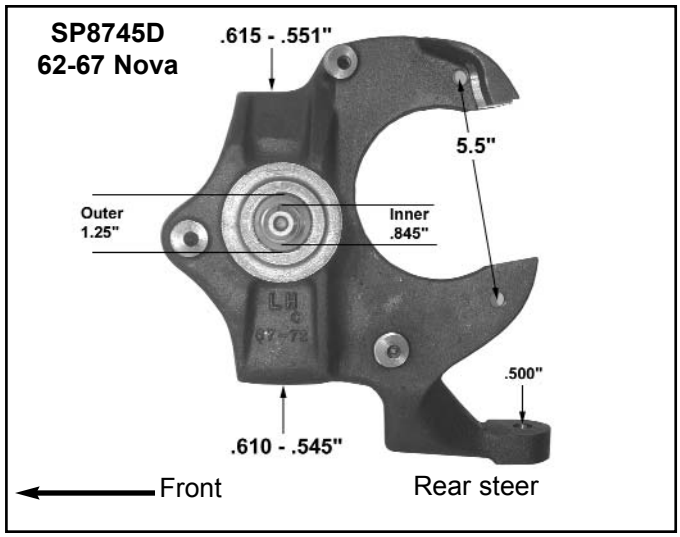

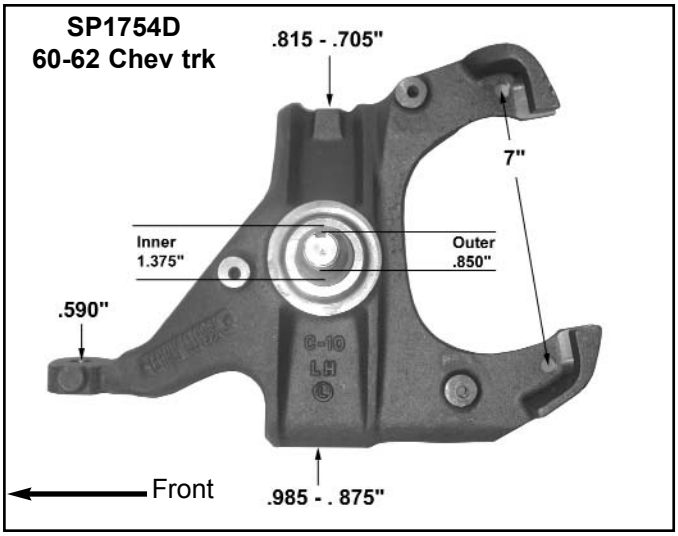

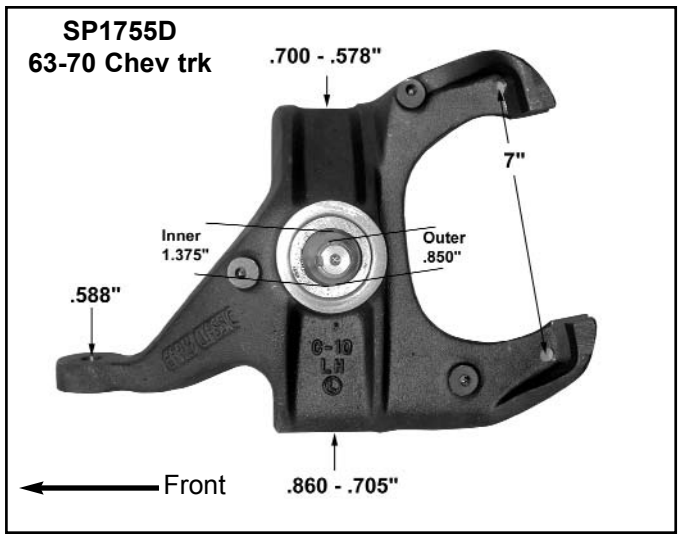

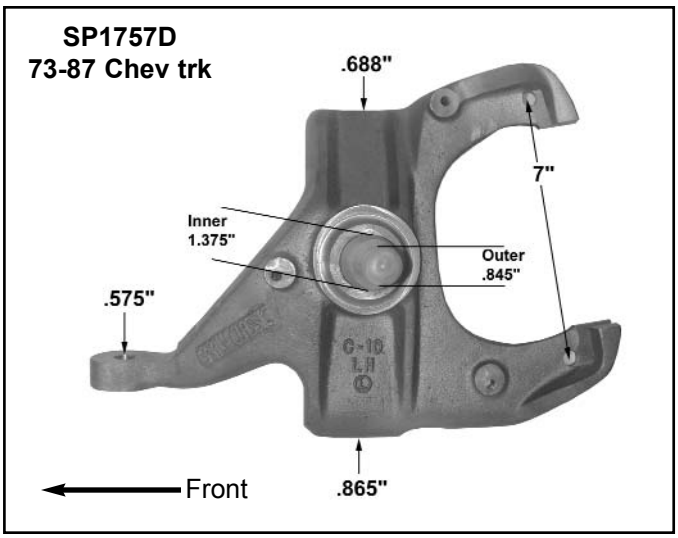
SP1757D
73-87 Chev trk
.688"
7"
Inner
1.375"
Outer
.845"
.575"
.865"
Front

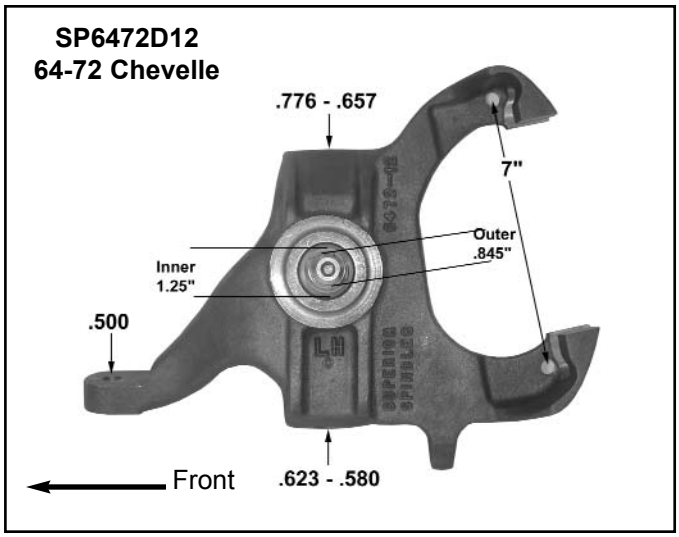
SP6472D12
64-72 Chevelle
.776 - .657
7"
Outer
.845"
Inner
1.25"
.500
.623 - .580
Front

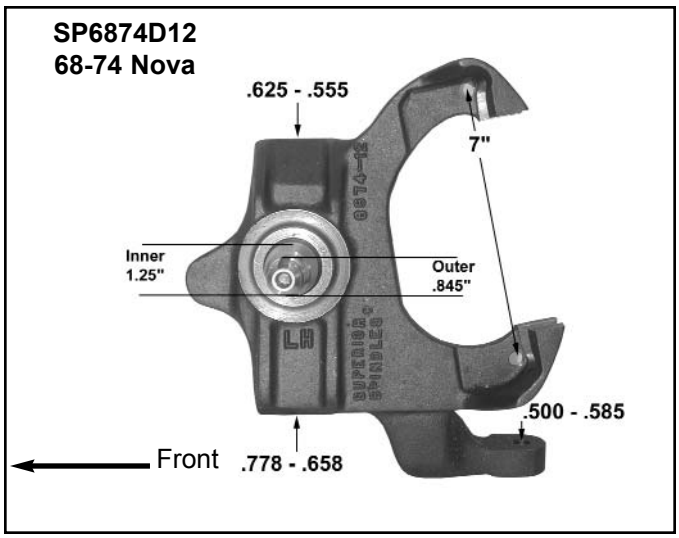
SP6874D12
68-74 Nova
.625 - .555
7"
Inner
1.25"
Outer
.845"
.500 - .585
.778 - .658
Front

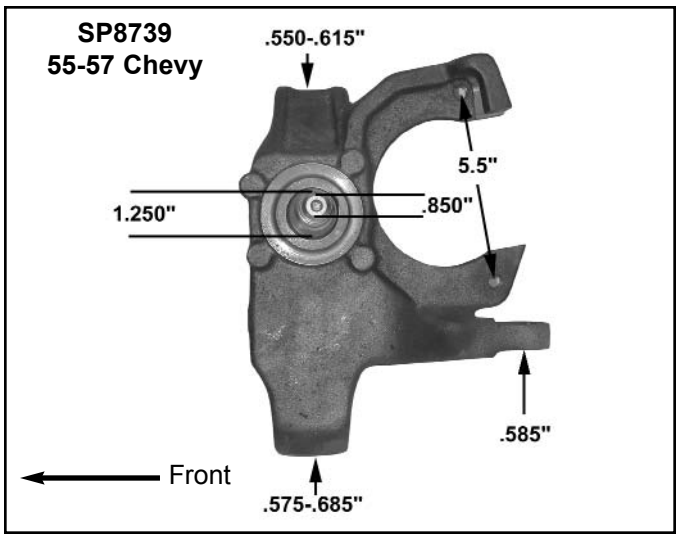
SP8739
55-57 Chevy
.550-.615"
5.5"
1.250"
.850"
.585"
.575-.685"
Front