WARNING

Proper operation of your brakes is essential for your safety and the safety of others. Any brake service should be performed ONLY by persons experienced in the installation and proper operation of brake systems. It is the responsibility of the person installing any brake component or kit to determine the suitability of the component or kit for the particular application. After installation and before operating your vehicle, be sure to test the function of the brakes under controlled conditions.

DO NOT DRIVE WITH UNTESTED BRAKES!

FOR TECHNICAL ASSISTANCE CALL:

888-533-1199

MONDAY - FRIDAY
8:00 AM TO 5:00 PM EST

IMPORTANT

Take time to read all the literature that came with this kit. Check the provided list of parts against what you received to ensure all parts are present. While this kit was designed to make the process of changing brake parts as simple as possible. NOTE: WITH SOME KITS IT MAY BE NECESSARY TO MAKE MINOR CHANGES TO YOUR CAR!

READ ALL WARRANTY DISCLAIMERS AND RETURN POLICIES INCLUDED IN THIS KIT PRIOR TO INSTALLATION!

MASTER POWER BRAKES

110 CROSSLAKE PARK RD. MOORESVILLE, N.C. 28117

www.mpbrakes.com

INSTALLATION INSTRUCTIONS
DB1721 SERIES

INCLUDED COMPONENTS

Your disc brake conversion kit will contain the following components:

1. Caliper mounting brackets and hardware
2. Calipers with pads
3. Rotors
4. Bearings, seals and dust caps
5. Caliper hoses

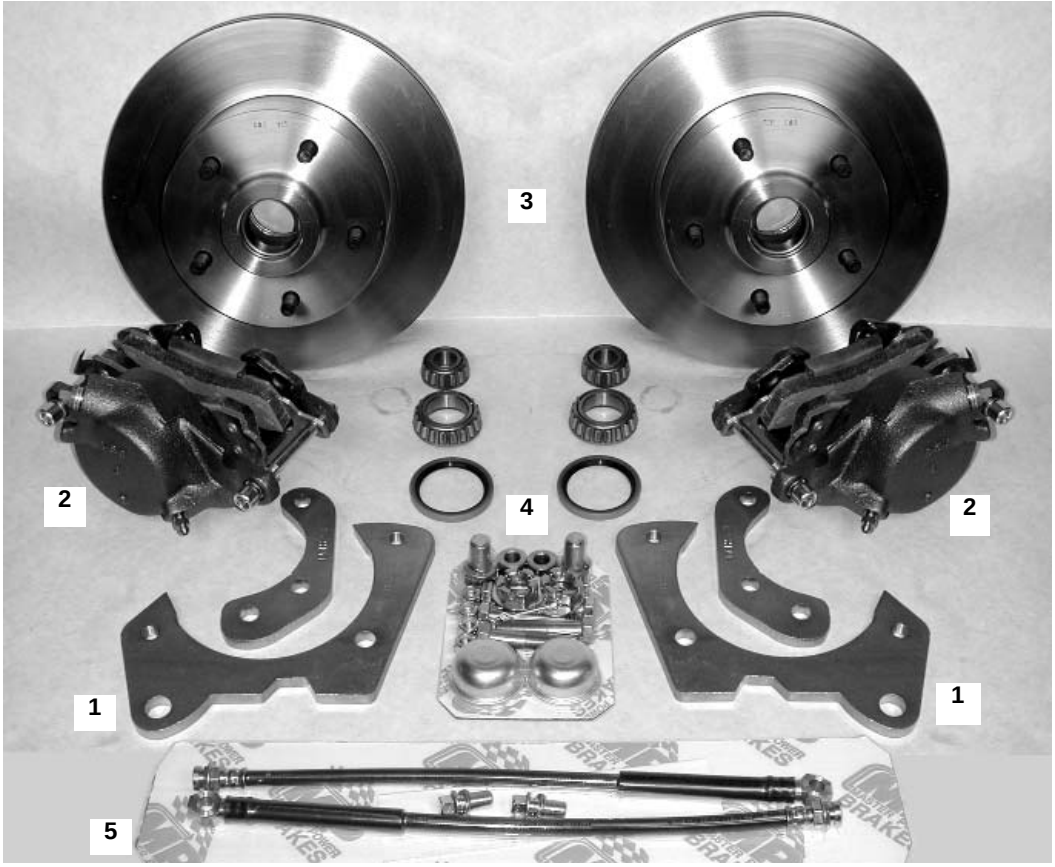

INSTALLATION

Installation of the disc brake kit will require the use of the following tools:

3/8” ratchet drive set	Mallet	Flare wrench set
Box end wrench set	Ball joint fork	Drum brake tool
Pliers	Screwdriver	Snips
Line flaring tool	Line bending tool	

Always refer to the vehicle owners manual for the correct torque specifications when installing this kit

1. Remove the stock Chevy front drums, brakes and backing plates. Clean and inspect the spindles for cracks or damage. Be sure to thoroughly clean out the 5/8" threaded hole at the top of the spindle. This is extremely impor tant. Use a non oil based cleaner such as Brake Clean. Clean the threads out with a bottoming tap if necessary.

2. 1959 and 1960 only
   In order to install the inner bearing on some spindles, you must remove .0004" from the inner bearing seating diameter. This can be accomplished with 240 grit emery paper and a rotary sanding motion on the spindle. This operation must be continued until the inner bearing can be slid onto the spindle without binding. Do not try grind ing or filing the spindle. It only takes a few minutes with emery paper.

3. Take the small support bracket and install it on the outer surface of the spindle in the two lower holes. Install one of the long 2-3/4 x 7/16” bolts through the suppoer bracket, through the rear hole on the spindle and through the stock steering arm. Install the shorter 7/16 bolt in the same manner through the front hole. Install locknuts and tighten.

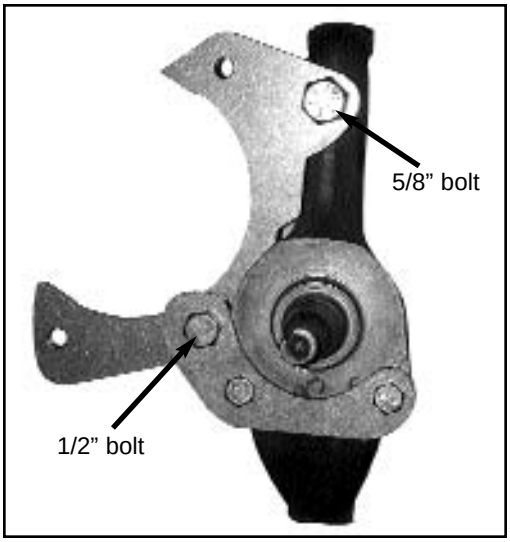

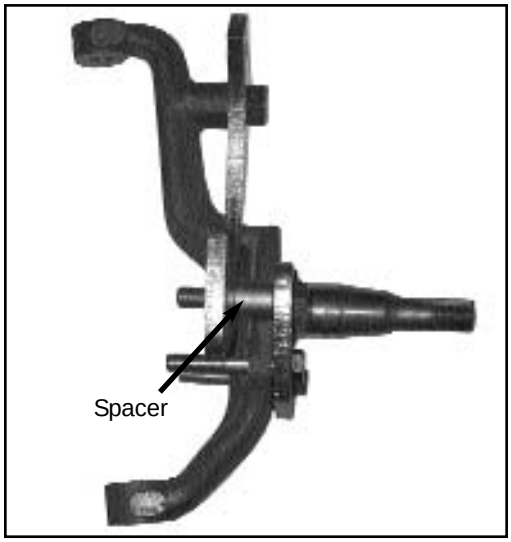

4. Install the larger caliper bracket as above. Install the 1/2 x 2 1/4” bolt through the caliper bracket, spacer and and support bracket as shown. Install the 1/2” locknut but do not tighten, just snug it up.

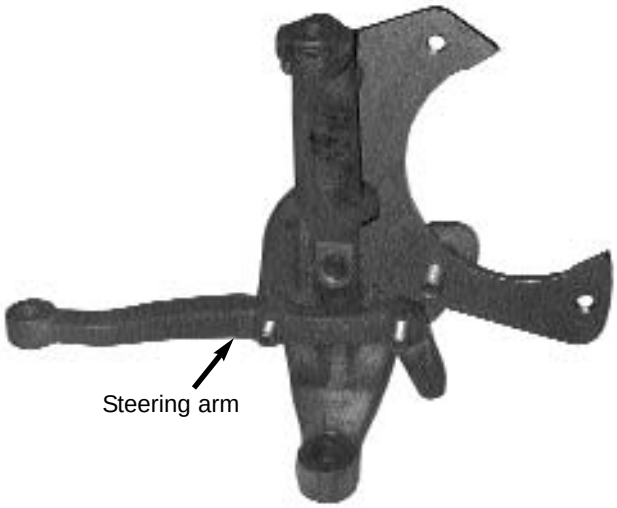

5. Install the 5/8 x 1 1/4” large bolt and lockwasher through the top of the bracket into the spindle. Now tighten all bolts and nuts.

GREASE ALL WHEEL BEARINGS WITH AUTOMOTIVE BEARING GREASE BEFORE INSTALLING

6. Take the rotor and clean it. Install the inner A6 bearing followed by the 7934S seal. Be sure to seat the seal into the rotor.

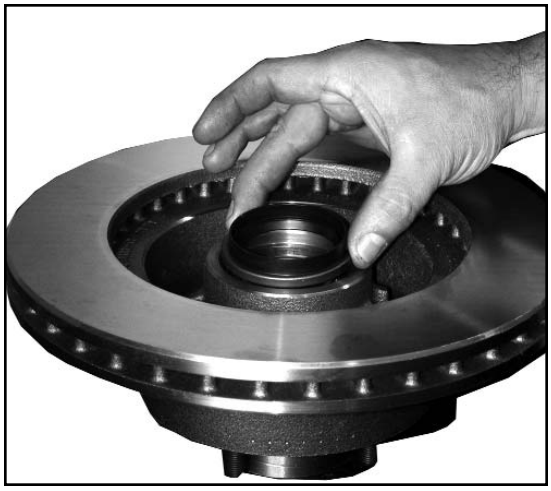

7. Install the rotor onto the spindle followed by the outer A2 bearing. Install the bearing retaining washer and the supplied wheel bearing nut. Be sure to install the cotter pin.

8. Turn the rotor on the spindle and check for any interference or minimal clearance between the inside surface of the rotor and the outer mounting bracket. Trim the bracket if necessary. Check for adequate clearence on the 1/2” bolts also. Be sure to install the cotter pin onto the spindle nut to secure.

9. Install the loaded caliper onto the spindle using the supplied caliper mounting bolts. **THE CALIPER BLEEDER SCREW MUST FACE UP!**

10. Repeat the procedure for the opposite side.

11. Connect the caliper hoses to the calipers making sure that the brass mounting block of the caliper hose is sandwiched between the two copper crush washers. The order should be caliper, copper washer, brass mounting block, copper washer, hose bolt.

MANUAL MASTER INSTALLATION:

1. Disconnect the master cylinder push rod from the brake pedal.
2. Remove the old master cylinder.
3. Using the two holes which line up with the larger hole, install the new master.
4. Attach the master cylinder push rod to the pedal with the supplied clevis attachment.
5. Place the proportioning valve bracket onto one of the nuts that holds the master and tighten.
6. Mount the valve to the bracket.
7. Run the two supplied pre-bent lines from the master to the valve.
8. Run hard line from the valve to the front and rear part of the braking system as per the valve diagram.

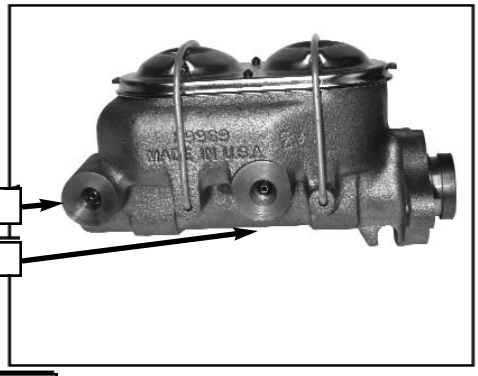

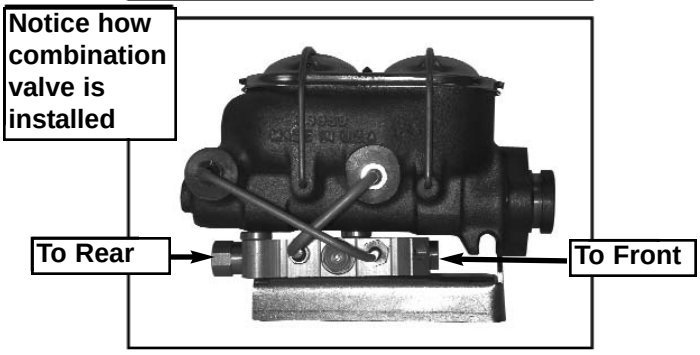

NOTE: When running lines to the front, you can plug one of the outlets on the valve (to front) and splice the one brake line to front calipers. You do not need to run two seperate lines to the combination valve.

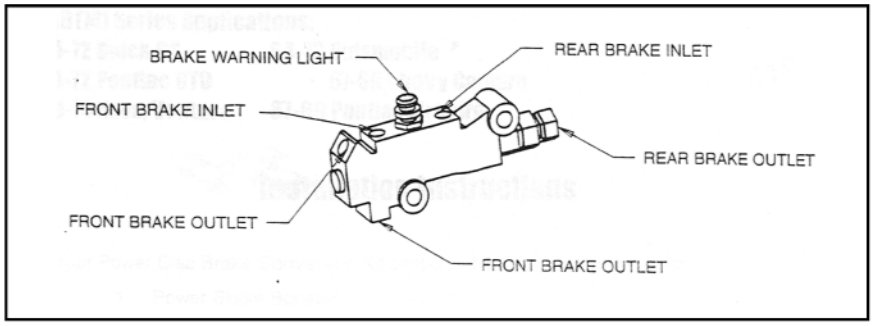

DB1721MHP
DISC KIT, BOTTOM, 59-64 CHEVY W/ SLOT / X-DRILL
PARTS LIST

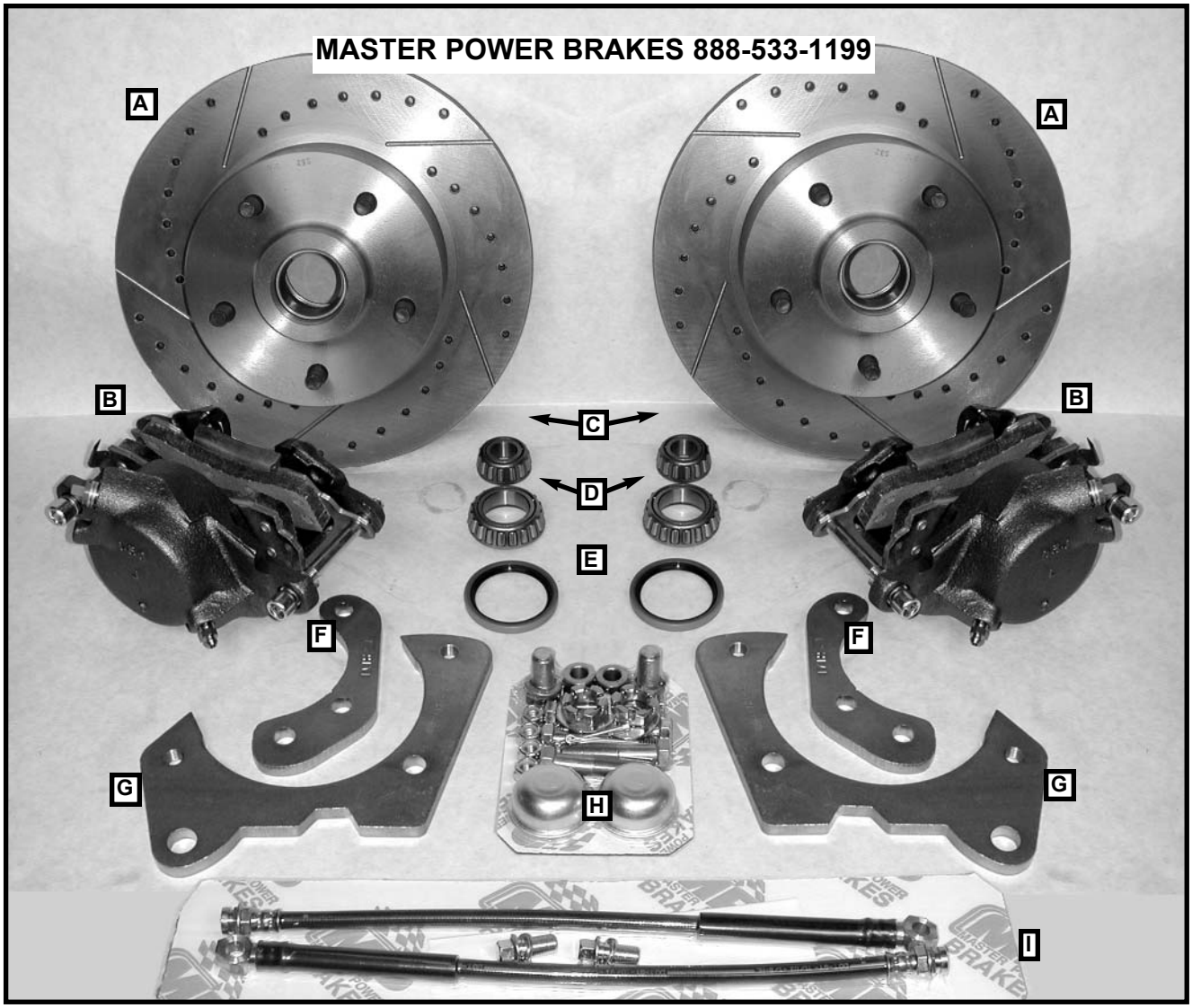

PARTS LIST
A) (1) RT85532RHP ROTOR, SLOTTED, RIGHT *****SOLD IN PAIRS*****
(1) RT85532LHP ROTOR, SLOTTED, LEFT *****SOLD IN PAIRS*****
B) (2) CA403940 CALIPERS, GM, LARGE, SINGLE PISTON
C) (2) HWA2 BEARING, OUTER
D) (2) HWA6 BEARING, INNER
E) (2) HW7934 SEAL, ROTOR
F) (2) BR1721-1 BRACKET, 59-64 CHEVY SUPPORT BRACKET
G) (2) BRCA1721-2 BRACKET, 59-64 CHEVY CALIPER BRACKET
H) (1) HW1721HK HARDWARE KIT
(2) 12R150PCOZ PIN, COTTER, 1/8 X 1 1/2 ZINC
(2) 43F275HCS8Y BOLT, 7/16-20 X 2 3/4 HCS GR-8 ZINC YELLOW
(2) 43F250HCS8Y BOLT, 7/16-20 X 2 1/2 HCS GR-8 ZINC YELLOW
(4) 43FNNEZ NUT, 7/16-20 NYLOCK, ZINC
(2) 50F250HCS8Y BOLT, 1/2-20 X 2 1/2 HCS ZINC YELLOW
(2) 50FNNEZ NUT, 1/2-20, NYLOCK ZINC
(2) 62F125HCS8Y HCS, 5/8-18 X 1 1/4 GR-8 ZINC YELLOW
(2) 62NLOC8Y WASHER, 5/8 SPLIT LOCKWASHER GR-8 ZINC YELLOW
(2) BU1711 SPACER, CALIPER BKTS
(2) HW4001 CAPS, DUST, 45.2MM /1 25/
(2) HW615005 WASHER, SPINDLE ORG. GM
(2) HW615065M SPINDLE NUT, GM, MODIFIED, MACHINED
I) (1) HS88520K HOSE KIT, FRONT, 69-77, 16" GM, SINGLE PISTON CALIPER
(2) HS88520 HOSE, F, 69-71 CAMARO
(2) HW21082 BOLT, HOSE 7/16 X 20 SHORT
(4) HW4390 COPPER SEALING WASHER USED W/ 4039 & 4040 CALIPER

Revised 3/29/04

DB1721MHP
CONTINUED

PARTS LIST (CONT.)

J) (1) MC390360M MASTER CYLINDER, GM 1” BORE, 7/16” STROKE DUAL RESERVOIR

K) (1) VL3360K VALVE KIT, W/ FITTINGS
- **(1) 25C175HCS5Z 1/4 X .175 BOLT**
- **(1) 25CNNEZ 1/4 COURSE NYLOCK NUT**
- **(1) BR1261N BRACKET, VALVE, UNIVERSAL**
- **(2) HW105-3 NUT, 3/16 TUBE 3/8-24 THD**
- **(1) HW106-3 PLUG, 3/16”**
- **(2) HW106-4 PLUG, INVERTED STEEL 1/4” O.D.**
- **(1) HW115-37 NUT, 3/16 TUBE 7/16-24 THD RED**
- **(1) HW115-38 NUT, 3/16 TUBE 1/2-20 THD BLACK**
- **(1) HW115-39 NUT, 3/16 TUBE 9/16-18 THD OLIVE**
- **(1) HW1709 PLUG, SWITCH, COMBO VALVE**
- **(1) HW210-43 ADAPTOR, BRASS 7/16-3/8M**
- **(2) HW300-3 COUPLER 3/16**
- **(2) HW300-4 COUPLER 1/4**
- **(2) HW300-5 COUPLER 1/2**
- **(1) HW3359 PLUG, COMBO VALVE, 4 WHEEL DISC**
- **(1) HW702-3 T-FITTING 3/16 X 3/16 X 3/16**
- **(1) VL3350 VALVE, COMBO, DISC / DRUM**

MASTER POWER BRAKES 888-533-1199