WARNING

Proper operation of your brakes is essential for your safety and the safety of others. Any brake service should be performed ONLY by persons experienced in the installation and proper operation of brake systems. It is the responsibility of the person installing any brake component or kit to determine the suitability of the component or kit for the particular application. After installation and before operating your vehicle, be sure to test the function of the brakes under controlled conditions.

DO NOT DRIVE WITH UNTESTED BRAKES!

FOR TECHNICAL ASSISTANCE CALL:

888-533-1199

MONDAY - FRIDAY
8:00 AM TO 5:00 PM EST

IMPORTANT

Take time to read all the literature that came with this kit. Check the provided list of parts against what you received to ensure all parts are present. While this kit was designed to make the process of changing brake parts as simple as possible. NOTE: WITH SOME KITS IT MAY BE NECESSARY TO MAKE MINOR CHANGES TO YOUR CAR!

READ ALL WARRANTY DISCLAIMERS AND RETURN POLICIES INCLUDED IN THIS KIT PRIOR TO INSTALLATION!

MASTER POWER BRAKES

110 CROSSLAKE PARK RD. MOORESVILLE, N.C. 28117

www.mpbrakes.com

BM1546

1953-1956 FORD TRUCK POWER BRAKE CONVERSION

INSTALLATION INSTRUCTIONS

FOR TECHNICAL HELP CALL

MASTER POWER BRAKES

TECH-LINE#

888-533-1199

REVISED 10/14/05

INSTALLATION INSTRUCTIONS

INCLUDED COMPONENTS
1. 7” power booster
2. Dual outlet master cylinder
3. Mounting bracket
4. linkage to pedal

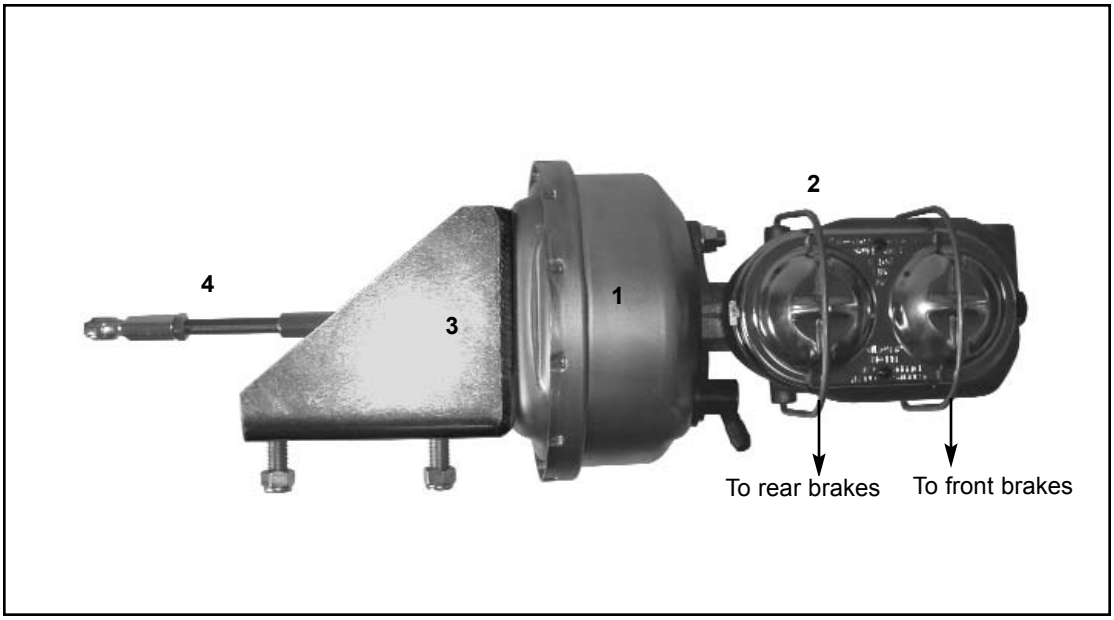

INSTALLATION

1. Remove the original master cylinder from the frame.
2. Remove the pedal from the old master and retain for later use.
3. Mount the new bracket to the frame using the two pre drilled holes in the bracket. (You may need to shim the bracket assembly away from the frame to allow for proper alignment of the pedal.) Use two 7/16 x 1 1/2” bolts.
4. Mount the power booster to the bracket.
5. Bench bleed the new master cylinder using DOT 3 or DOT 4 fluid.
6. Mount the master to the booster and supply the booster with 18” vacuum using vacuum hose.
7. Attach the threaded extension with swivel to the booster rod coming from the back of the booster.
8. Connect the swivel to the original pedal.
9. Be sure all nuts are tightened.
10. Plumb system as required and bleed entire system before driving.

It is recommended that you use the correct combination valve to balance your system such as our VL3350 disc/drum valve or our VL3359 disc/disc valve.

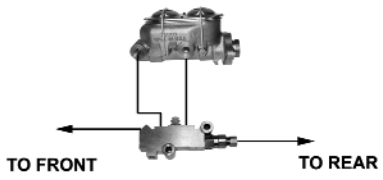

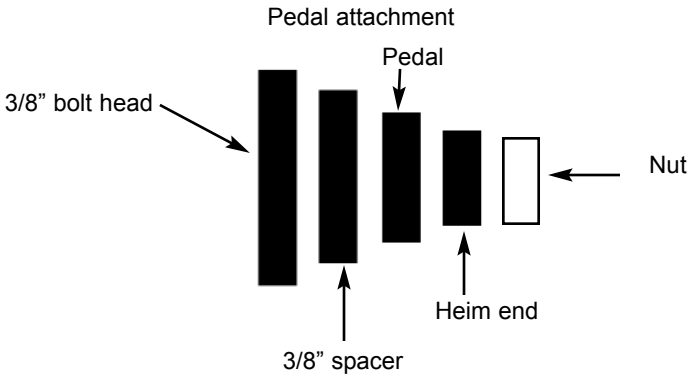

BM1546
PARTS LIST
BOOSTER/ MC, 53-56 FORD TRK

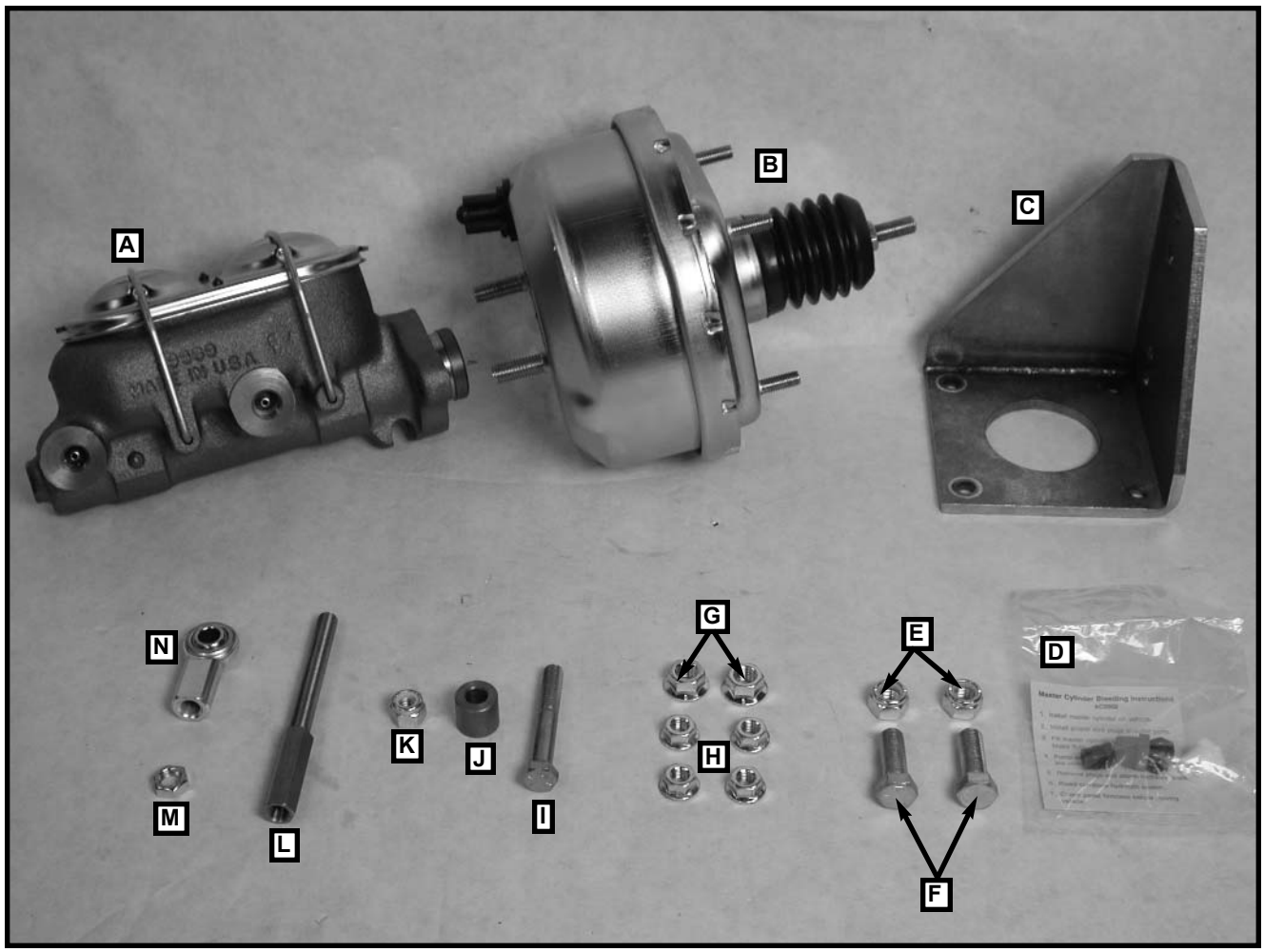

PARTS LIST

A) (1) MC390545P MASTER, 1-1/8 BORE 4WD CORVETTE STYLE MASTER
B) (1) BS1001 BOOSTER, 7”
C) (1) BR1751 BRACKET, POWER, 47-54 CHEVY BOOSTER BRACKET
D) (1) AC2002 BLEEDER KIT, USED IN DUAL MASTER CYLINDER APPL.
E) (2) 37CNWFZ NUT, 3/8-16 WHIZ FLANGE ZINC
F) (2) 37C125HCS8Y 3/8-16 X 1 1/4 HCS, GR-8, ZINC
G) (2) 100CNWFZ NUT, M10, SERRATED FLANGE
H) (4) 80CNWFZ NUT, M8-1.25, HEX FLANGE
I) (1) 37F225HCS8Y BOLT, 3/8-24 X 2 1/4 HCS GR-8 ZINC
J) (1) BU1516 BUSHING, REAR DISC KIT 9” SIZE LENGTH 11/16 X .750, 3/8 HOLE
K) (1) 37FNNEZ NUT, 3/8-24 NYLOCK
L) (1) PRBL3 PUSH ROD 3” FOR BOOSTER
M) (1) 37FNFJOZ NUT, 3/8-24 HEX FINISH J-NUT ZINC
N) (1) HW4034 ROD END, FEMALE, 3/8-24

MASTER POWER BRAKES 888-533-1199

Revised 10/28/03