WARNING

Proper operation of your brakes is essential for your safety and the safety of others. Any brake service should be performed ONLY by persons experienced in the installation and proper operation of brake systems. It is the responsibility of the person installing any brake component or kit to determine the suitability of the component or kit for the particular application. After installation and before operating your vehicle, be sure to test the function of the brakes under controlled conditions.

DO NOT DRIVE WITH UNTESTED BRAKES!

FOR TECHNICAL ASSISTANCE CALL:

888-533-1199

MONDAY - FRIDAY
8:00 AM TO 5:00 PM EST

IMPORTANT

Take time to read all the literature that came with this kit. Check the provided list of parts against what you received to ensure all parts are present. While this kit was designed to make the process of changing brake parts as simple as possible. NOTE: WITH SOME KITS IT MAY BE NECESSARY TO MAKE MINOR CHANGES TO YOUR CAR!

READ ALL WARRANTY DISCLAIMERS AND RETURN POLICIES INCLUDED IN THIS KIT PRIOR TO INSTALLATION!

MASTER POWER BRAKES

110 CROSSLAKE PARK RD. MOORESVILLE, N.C. 28117

www.mpbrakes.com

INSTALLATION INSTRUCTIONS
DB1755MD6
1963-1970 CHEV PICK-UP
6 lug DISC KIT

INCLUDED COMPONENTS:

1. Calipers with pads
2. Rotors
3. Bearings and seals
4. Rubber hoses with hose bolts and crush washers
5. Drop spindles with brackets

INCLUDES DROP SPINDLES

NOTE: This kit is designed to be used on 63-70 Chevrolet half ton Pick-up truck.

DISC SPINDLE INSTALLATION

1. If you are performing the installation with a jack, be sure that the parking brake is set and that the rear wheels are chocked. Support the front of the vehicle with jack stands. Never work on sloping ground.

2. If you are using a lift, raise the vehicle to a comfortable working height.

3. Remove the front wheels.

4. At this point, be sure to place the proper support under the lower control arm and lower the vehicle so the weight of the vehicle is on the lower arm.. Failure to do so will allow the coil spring to blow out when the spindle is removed which could result in serious injury and damage to the vehicle.

5. Utilizing a mallet and screwdriver, remove the brake hose clip at the frame bracket by tapping it loose. Disconnect the brake hose from the hard line using the appropriate flare wrenches.

6. Locate the ball joint at the tie rod end and the steering arm. Remove the cotter pin and loosen the ball joint nut approximately 1/2 off. This allows for a controlled seperation of the tie rod and the steering arm. Place the ball joint fork between the steering arm and the ball joint. Strike the fork with a mallet until the steering arm and ball joint seperate. Remove the ball joint nut.

7. In order to seperate the lower ball joint, the steering arm must must be removed. Remove the dust cover by twisting a screwdriver between the dust cover and the hub. Remove the cotter pin and spindle nut. Pull the drum off. Now the steering arm bolts cam be removed.

8. Repeat the process described in step 6 for the lower and upper ball joint at the spindle. Place the ball joint fork between the spindle and the ball joint.

9. Slowly lower the support and remove the remains of the drum brake assembly as a unit. Now the coil spring can be removed.

10. Place the disc brake spindle onto the lower ball joint. Torque the nut to the specification in the owners manual. Insert the cotter pin and bend it.

11. Raise the control arm support and repeat step 6 for the upper ball joint. Remember to use the torque specification in the owners manual.

12. Insert the tie rod end into the spindle. Torque the nut to the recommended specification. Install the cotter pin and bend it.

13. Use a grease gun to grease the tie rod and ball joints.

Figure 1. Upper Ball Joint Installation

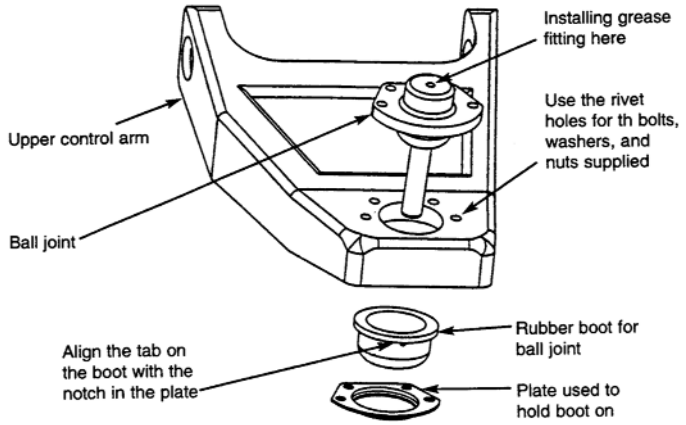

DISC BRAKE ASSEMBLY

STEP 1:

Start with a clean spindle.

Right side spindle

STEP 2:

Grease and install Install the inner bearing.

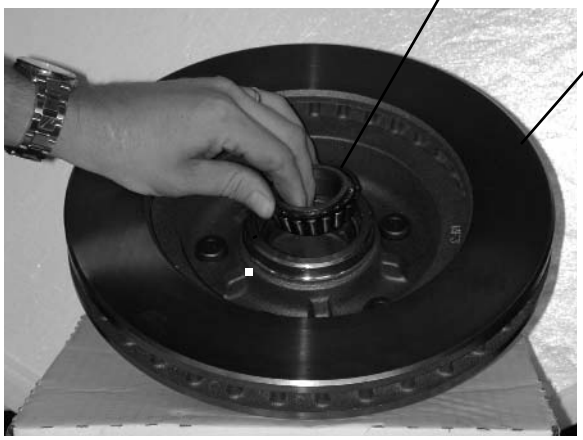

BE SURE TO GREASE BEARINGS WITH A HIGH QUALITY BEARING GREASE

STEP 3:

After greasing the inner bearing, install the rotor seal. Tap the seal with a small hammer so it fully seats.

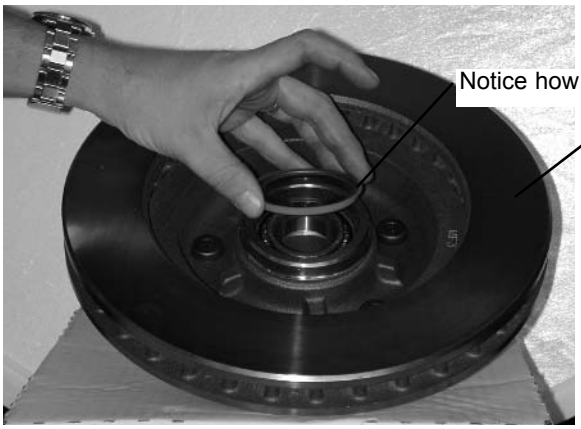

STEP 4:

Install rotor onto the spindle. Then install the outer bearing.(As shown in figure 1.) BE SURE TO GREASE. After completing this install spindle washer and spindle nut. Tighten the spindle nut until it's snug and the rotor does not spin freely. Back off the nut slightly until the rotor spins freely. Now install the cotter pin and bend it over. (As shown in figure 2.) Install the grease cap.

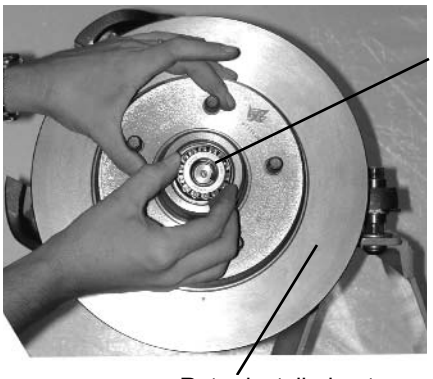

Figure 1:

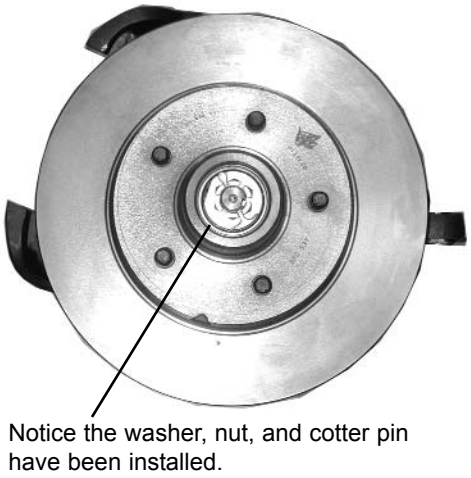

Figure 2:

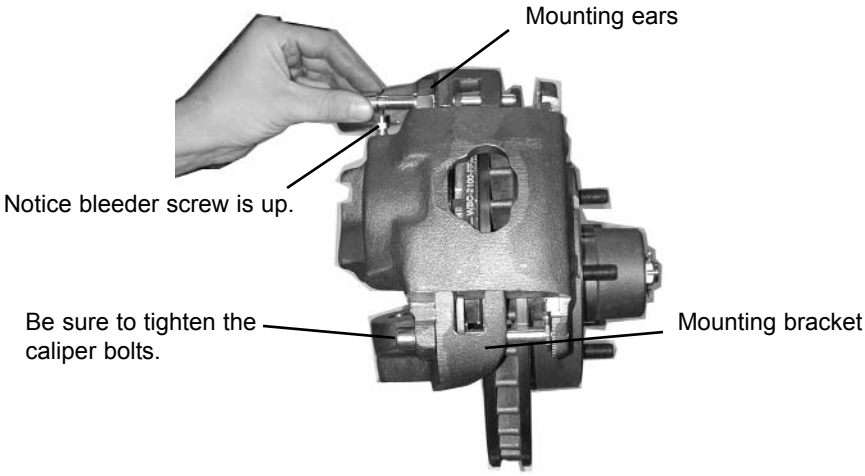

STEP 5:

Install the caliper with pads using the supplied hardware. Remember the caliper bracket fits between the caliper and the mounting ears. (Bleeder screw up.) Once insatlled turn rotors to be sure everything runs true.

STEP 6:

Now install the tire and wheel. Check closely for adequate wheel clearence on the caliper before you turn the wheel. Also check for wheel well clearenece. If all is well turn the wheel very slowly to be sure there are no points of interference. If everything checks out OK, move on to next step.

STEP 7:

Now install the brake hoses after assembly and check for clearence at full left and right turns. (Do this check with wheels on the ground.) Bleed the entire system using new brake fluid. (DOT 4 is highly recommended.) CHECK THE PEDAL FOR FIRMNESS BEFORE MOVING.

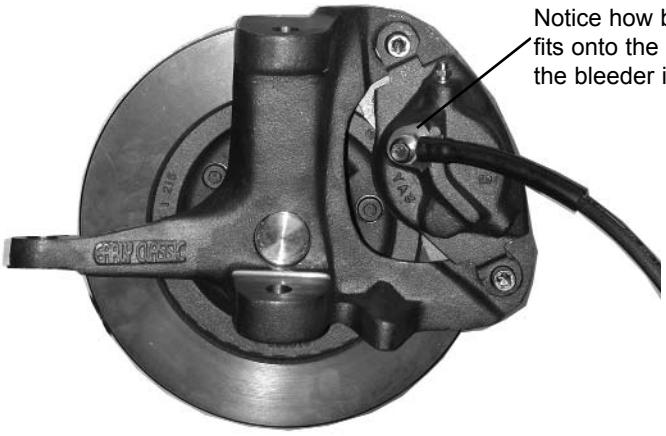

MANUAL MASTER INSTALLATION:

1. Disconnect the master cylinder push rod from the brake pedal.
2. Remove the old master cylinder.
3. Using the two holes which line up with the larger hole, install the new master.
4. Attach the master cylinder push rod to the pedal with the supplied clevis attachment.
5. Place the proportioning valve bracket onto one of the nuts that holds the master and tighten.
6. Mount the valve to the bracket.
7. Run the two supplied pre-bent lines from the master to the valve.
8. Run hard line from the valve to the front and rear part of the braking system as per the valve diagram.

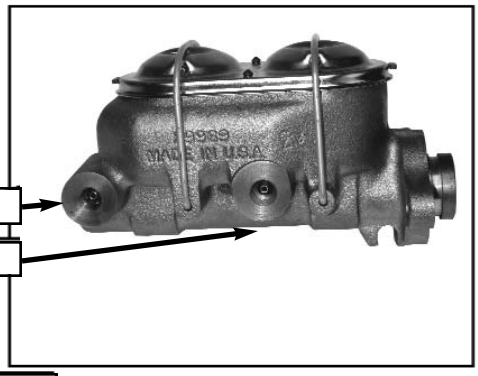

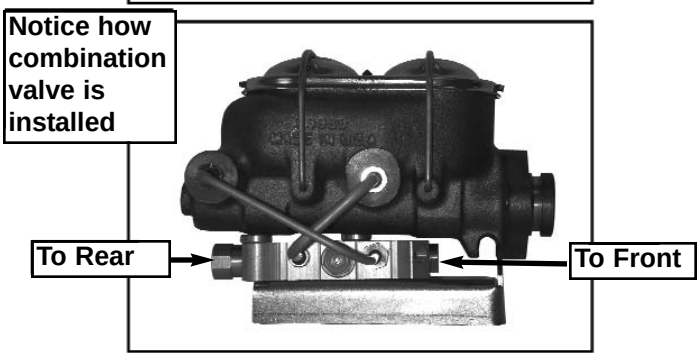

NOTE: When running lines to the front, you can plug one of the outlets on the valve (to front) and splice the one brake line to front calipers. You do not need to run two seperate lines to the combination valve.

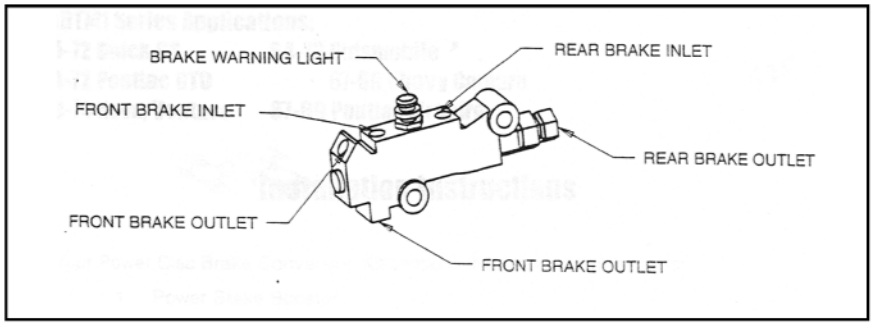

DB1755MD6
DISC KIT, 63-70 TRUCK 6 LUG 2 1/2 DROPPED, MAN.
PARTS LIST

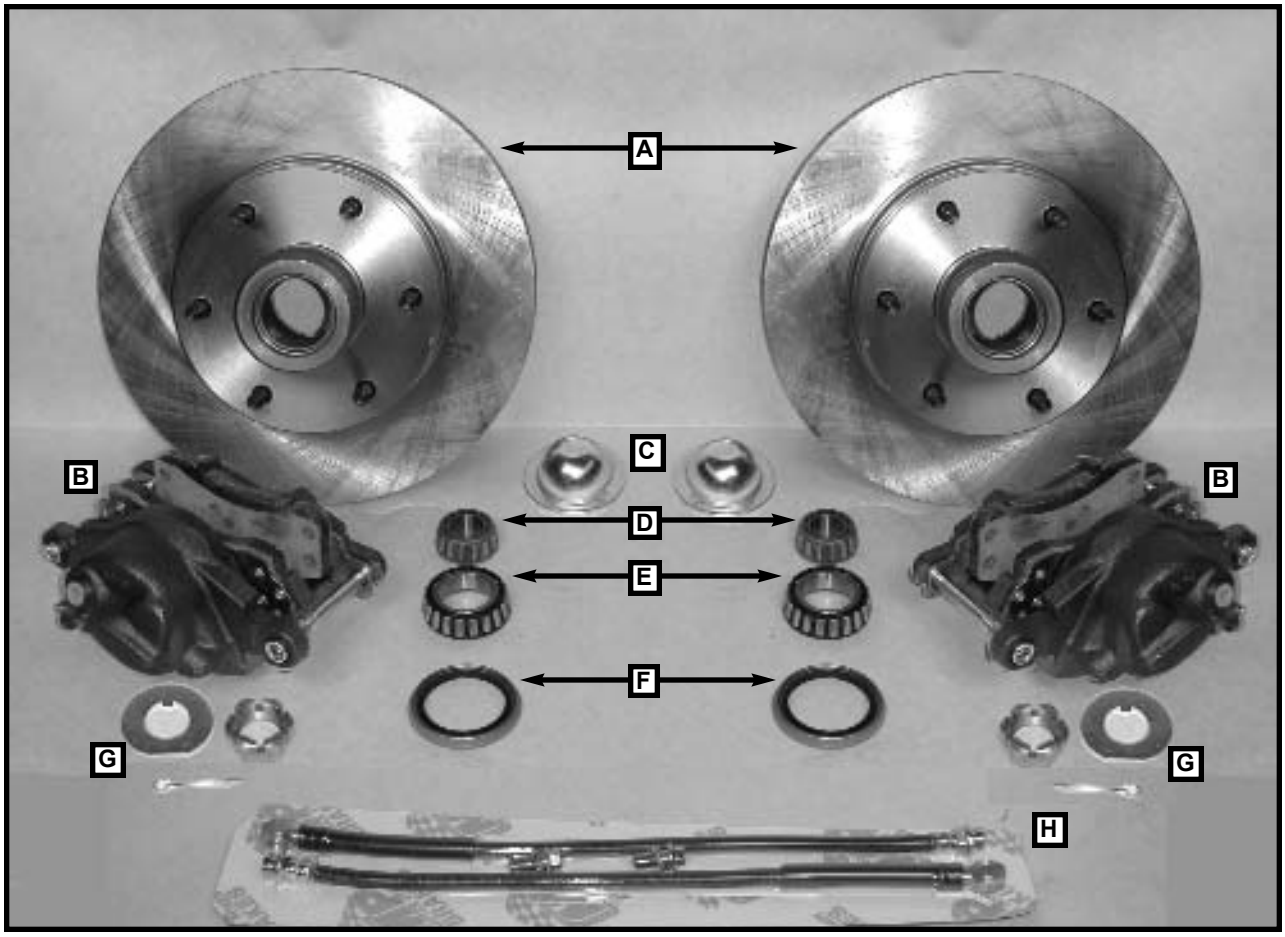

PARTS LIST

A) (2) RTECE03-6070 6 LUG CHEVY TRUCK ROTORS
60-70 MOD. ROTORS
EARLY CLASSIC ENTERPRISE
B) (2) CA404546 CALIPERS, 6072 CHEVY TRUCK 5 OR 6 LUG PATTERN
C) (2) HW4002 CAP, DUST, 53.2 MM/2 3/32
D) (2) HWA3 BEARING, OUTER
E) (2) HWA5 BEARING, INNER
F) (2) HW8871 SEAL, ROTOR
G) (1) HW1701K SPINDLE NUT / WASHER KIT
(2) HW615005 WASHER, SPINDLE ORG. GM
(2) HW615065 NUT, SPINDLE GM
(2) 12R100PCOZ COTTER PIN, 1/8 X 1”
H) (1) HS5157K HOSE KIT, 18” HOSES 10MM
(2) HS5157 HOSE 18” 10MM HOSE
(4) HW21206 WASHER, COPPER USED FOR METRIC HOSE BOLT
(2) HW5155 10MM METRIC BOLT COURSE

CONTINUED ON PAGE 2

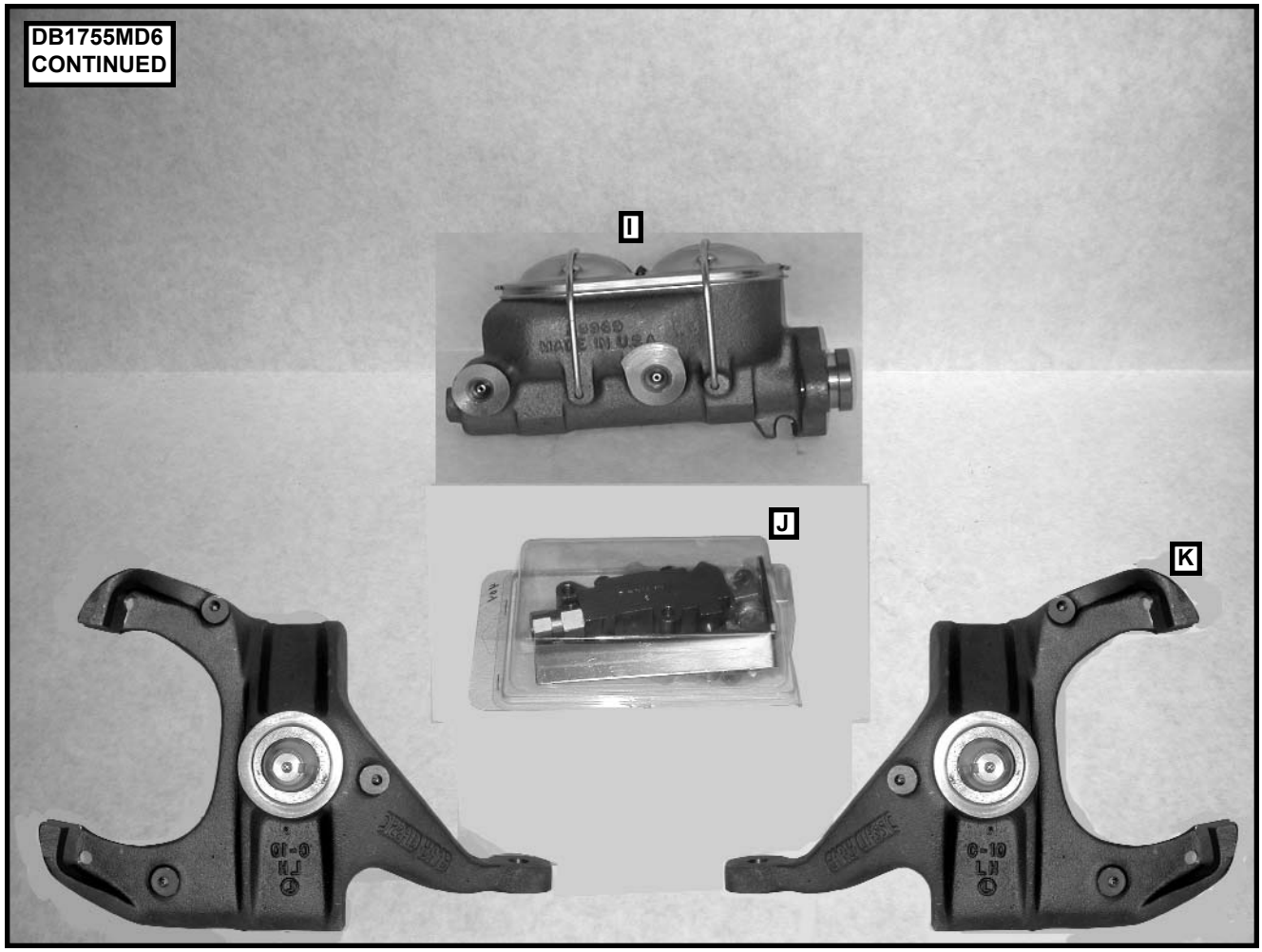

PARTS LIST (CONT.)

I) (1) MC390360M MASTER CYLINDER, GM 1” BORE, 7/16” STROKE DUAL RESERVOIR
J) (1) VL3360K VALVE KIT, W/ FITTINGS
- **(1) 25C175HCS5Z 1/4 X .175 BOLT**
- **(1) 25CNNEZ 1/4 COURSE NYLOCK NUT**
- **(1) BR1261N BRACKET, VALVE, UNIVERSAL**
- **(2) HW105-3 NUT, 3/16 TUBE 3/8-24 THD**
- **(1) HW106-3 PLUG, 3/16”**
- **(2) HW106-4 PLUG, INVERTED STEEL 1/4” O.D.**
- **(1) HW115-37 NUT, 3/16 TUBE 7/16-24 THD RED**
- **(1) HW115-38 NUT, 3/16 TUBE 1/2-20 THD BLACK**
- **(1) HW115-39 NUT, 3/16 TUBE 9/16-18 THD OLIVE**
- **(1) HW1709 PLUG, SWITCH, COMBO VALVE**
- **(1) HW210-43 ADAPTOR, BRASS 7/16-3/8M**
- **(2) HW300-3 COUPLER 3/16**
- **(2) HW300-4 COUPLER 1/4**
- **(2) HW300-5 COUPLER 1/2**
- **(1) HW3359 PLUG, COMBO VALVE, 4 WHEEL DISC**
- **(1) HW702-3 T-FITTING 3/16 X 3/16 X 3/16**
- **(1) VL3350 VALVE, COMBO, DISC / DRUM**

K) (2) SP1755D DROPPED SPINDLE 63-70 2 1/2 DROP NEW

MASTER POWER BRAKES 888-533-1199

Revised 9/9/04